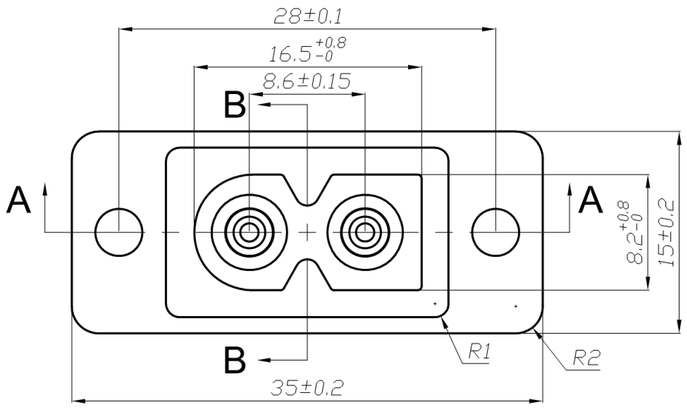

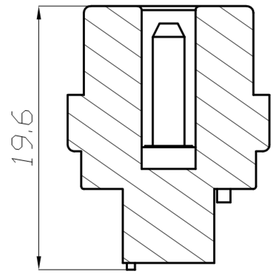

SECTION B~B

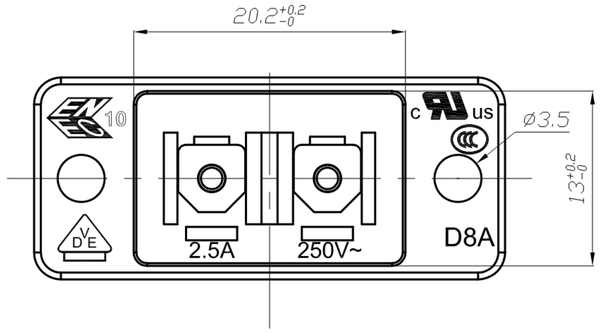

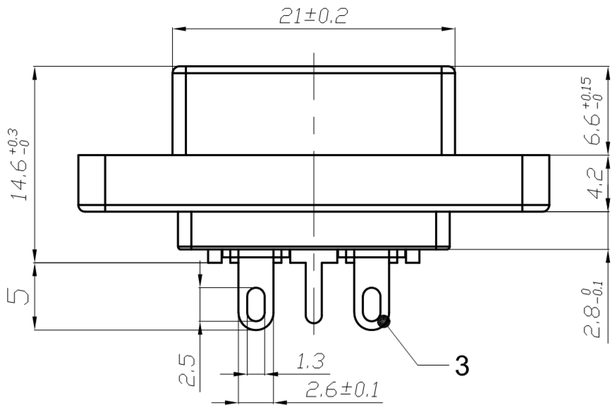

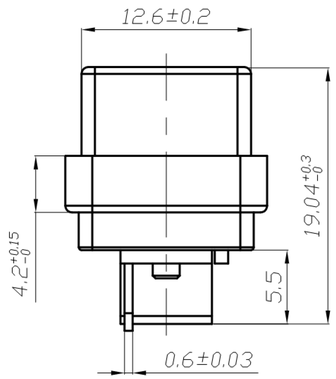

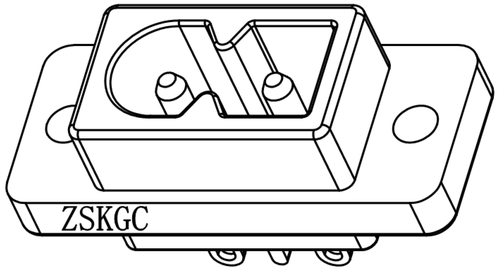

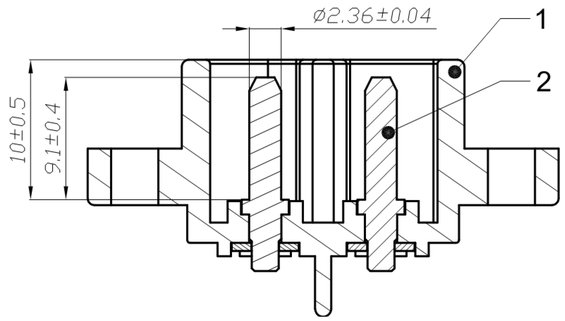

SECTION A~A

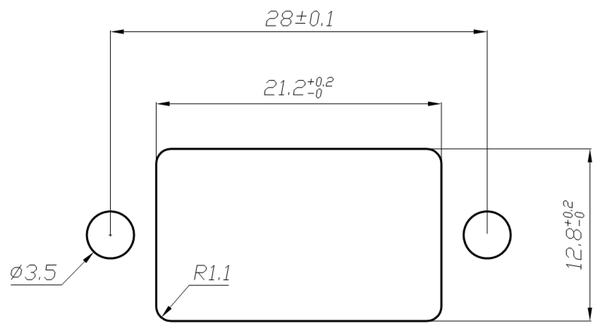

PANEL CUT-OUT

SPECIFICATION 规格:

Rating:

10A 250VAC (CCC;VDE)

15A 250VAC (UL;CUL)

Contact resistance:50m Ω max

Insulation Resistance:100MΩ (min) 500VDC

Dielectric Strength:2000VAC 0.5mA 1 minutes

Life expectancy:5000 cycles

ITEM NO.	DESCRIPTION	DRAWN	DATE

東莞市高迪電子有限公司
DONG GUAN GAO DI ELECTRONICS CO. , LTD

TOLERANCE UNLESS OTHERWISE STATED : Up to 5 ±0.2; Above 5 ~ 15 ±0.3; Above 15 ~ 30 ±0.4; Above 30 ~ 50 ±0.5; Angle ±0.3°

3RD. ANGEL'S | UNITS MM

DRAWN BY: Ming Ming Zou	DATE 10/31/13	MAT'L	
CHECKED BY: Ning Ning Su	DATE 10/31/13	FINISH	
APPROVED BY: Jia Xiang	DATE 10/31/13	SCALE	1 : 1
		SHEET NO.	1 of 1

TITLE	SWITCH+JACK		
MODLE	AC POWER SOCKET		
DWG NO.	GD-JR-201D8A	SIZE	A4
PART NO.		VER	R